Shear Cut Dovetail / Guide Bar 6003-GB

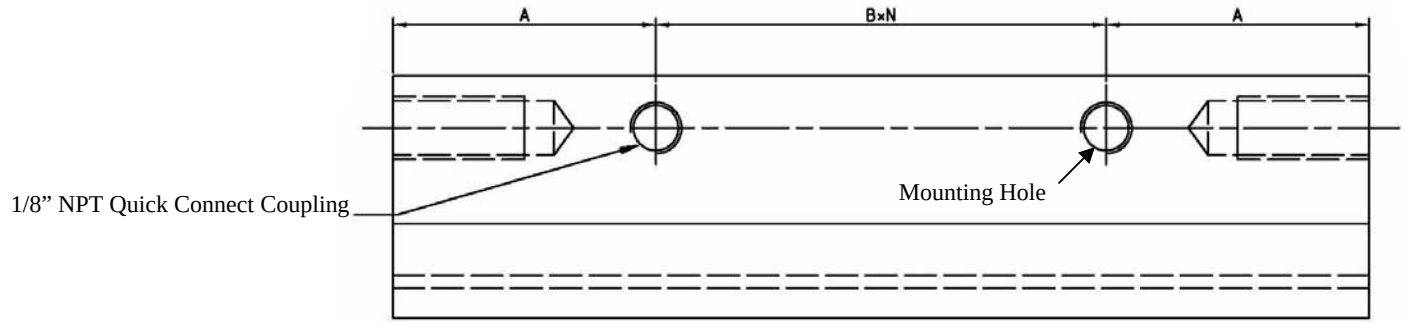

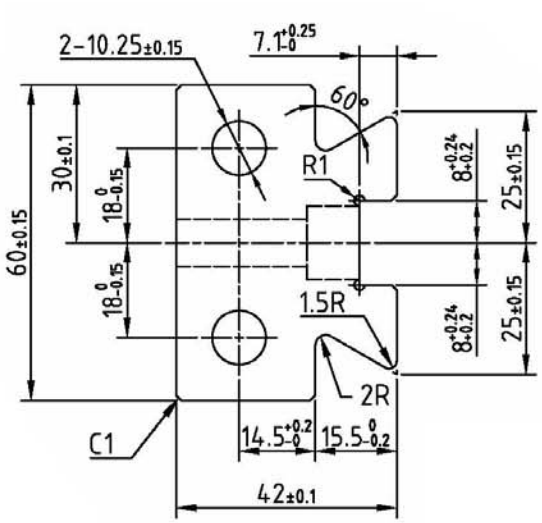

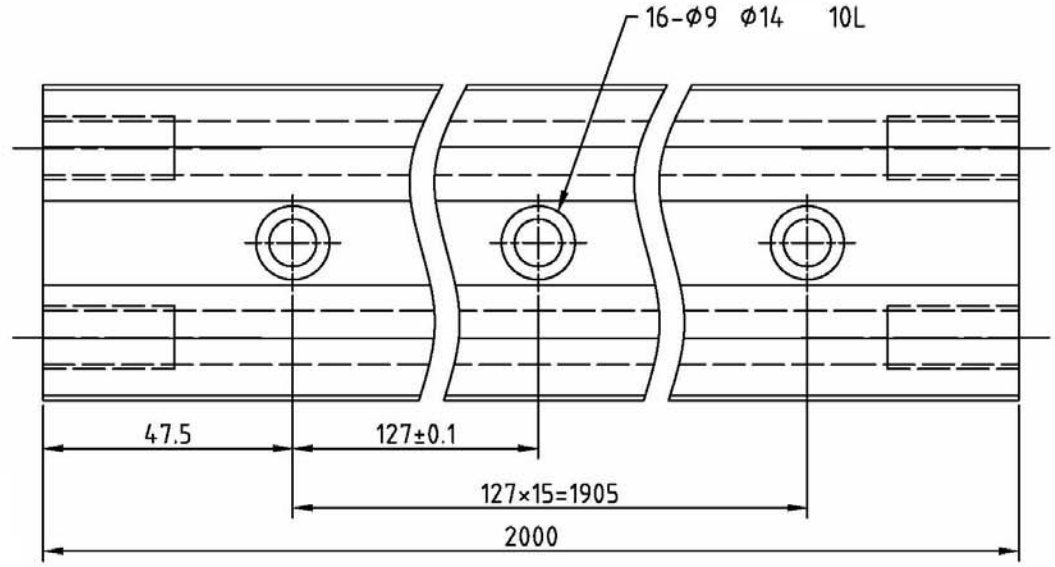

DETAIL	SHEET	QTY	DESCRIPTION	MAT'L

UNLESS OTHERWISE SPECIFIED: DIMENSIONS ARE IN INCHES | TOLERANCES: 3 PLACE DECIMALS: ±.005, 2 PLACE DECIMALS: ±.015 | FRACTIONS: ±1/32, ANGLES: ±0°-30'

Burris Machine Company, Inc.
Po Box 2858 / 1631 Main Ave. Dr. NW Hickory, NC 28601
Phone: 828-322-6914 / Fax: 828-324-2793
Email: burris@burrismachineco.com
Website: burrismachineco.com

JOB NUMBER:
SCALE:
DATE:
DRAWN BY:
CHECKED BY:

TITLE : **6003-GB**

FILE NAME: **DOVETAIL / GUIDE BAR**

DRAWING NUMBER | REVISION